THE CLASSROOM AMPLIFICATION CHALLENGE TO ANSI S12.60–2002

David Lubman
David Lubman and Associates
Westminster, CA 92683

Purveyors of sound amplification systems are mounting a very serious threat to the classroom acoustics standard—ANSI S12.60-2002. As discussed below, these amplification systems address some of the same issues as the American National Standards Institute (ANSI) standard but provide limited benefits.

America wants to improve the educational achievement and inclusiveness of its schools, and implementation of the ANSI standard promises this. ANSI-compliant schools are far friendlier places for teaching and learning than noisy schools. ANSI-compliant schools are also more inclusive, accommodating the needs of millions of mainstream students who are disadvantaged by mild hearing, language, or other learning disabilities.

One reason for the large number of disadvantaged mainstream students is that America is once again a nation of immigrants. English language learners must hear and understand spoken words in classrooms as a prerequisite to learning. Yet, an estimated two-thirds of American classrooms fail to meet minimum requirements of the ANSI standard. The burden of that failure falls first upon disadvantaged students, teachers, and parents. Ultimately, the cost is borne by all.

Today's challenge is to bring about widespread implementation of the ANSI standard. Implementation seems daunting to schools. For decades, American schools operated with weak noise guidelines such as the California Department of Education's 50-dBA classroom noise limit—or none at all! After decades of disregarding the importance of acoustics to learning, favorable buzz about the standard is awakening schools to the benefits of good acoustics. Some school authorities now actually desire good acoustics, but fear the costs and technical challenges of designing and renovating schools to satisfy ANSI's 35-dBA noise limit.

"The ... choice ... is between amplified classrooms with poor acoustics and unamplified ANSI-compliant classrooms"

Classroom acoustics advocates are pleased that the ANSI standard is awakening schools to the acoustical needs of students and teachers. Unfortunately, in earlier battles over approval of the standard, industry adversaries spread disinformation to school administrators and state legislatures outrageously exaggerating the cost and challenge of compliance with ANSI's 35-dBA noise limit. This made schools vulnerable to slick hawkers of amplifiers that promise good speech intelligibility and teacher voice relief without meeting ANSI requirements for low noise and reverberation.

To paraphrase H.L. Mencken's observation, for every problem there is a solution that is fast, painless … and wrong! Classroom amplification is a quintessential example of Mencken's observation. Unfortunately, many school decision makers don't see through the honeyed words of amplifier salespeople. Many choose the classroom amplification "band-aid" over good acoustics.

We agree that amplifiers are needed in auditoriums, very large lecture rooms, and in special education rooms for hearing-impaired students. But we cannot justify their use in small lecture rooms intended for mainstream students. And we deplore their use as a substitute for good acoustics.

How did the amplifier challenge come about? For years, vendors provided classroom amplification systems to satisfy the need for elevated speech levels in special education rooms for hearing-impaired students. Perhaps to enlarge that limited market, some vendors of "free-field systems" (as classroom amplifiers are termed) are now aggressively promoting their use in mainstream classrooms.

There are too many mainstream classrooms in which students cannot understand what their teacher is saying because of noise and reverberation, and where teachers suffer vocal fatigue from the effort of speaking above classroom noise. These situations arise because of poor classroom acoustics. These are the very problems the ANSI standard is meant to prevent or remedy. Are amplifiers a valid alternative for good classroom acoustics?

Actually even classroom amplifiers work better with good acoustics (low noise and reverberation). But amplifiers are unsatisfactory substitutes for good acoustics. We believe it is wrong to promote amplifiers as universal panaceas for all classroom acoustical problems.

Advocates of good classroom acoustics claim improved student achievement and behavior and reduced teacher voice fatigue. Amplifier hawkers cite testimonials and studies claiming the same educational benefits for amplifiers. The real choice schools are making is between amplified classrooms with poor acoustics and unamplified ANSI-compliant classrooms. Here is a short list of the advantages of ANSI compliance versus amplification.

- ANSI-compliant classrooms don't need amplifiers. Students and teachers hear each other without strain or fatigue.
- Amplification has limited benefits

in non-ANSI-compliant classrooms.

- Amplification inhibits classroom spontaneity. Students must overcome inhibitions and request or wait for a microphone. They must be also taught effective microphone skills, which is especially difficult in lower grades.
- There are problems and limitations of indiscriminate installation. One example: amplifiers are often installed in excessively reverberant classrooms where amplification is known to be ineffective. Another example: high levels of amplified sound leak through poorly insulated walls to interfere with learning in adjacent classrooms.
- ANSI compliance is a pay-once solution. Amplifiers have continuing costs.

It may be true that the costs, effort, and time needed to achieve ANSI compliance in classroom renovations exceed the initial cost of classroom amplifiers. The false perception that amplifiers are a fast and inexpensive solution to all classroom acoustic problems is exploited by amplifier salespeople. Without knowledgeable persons to challenge these claims, who can blame school administrators for falling for the pitch? This may explain how amplifier lobbyists in Ohio evidently secured legislation ensuring that all future classrooms in their state are pre-wired for amplifiers. We believe that Ohioans—and all Americans—would be better served by legislating ANSI-compliant classrooms.

Bridget Shield of London's South Bank University was asked recently about her experience with classroom amplification in the UK. Her answer was devastating:

"What we are finding is that most of the systems … are not used or are used incorrectly as they have broken cables or have not been installed correctly or teachers have not been trained in their use. Or … they are installed in rooms with poor acoustics where they are ineffective and the rooms should be acoustically treated."

With time and experience, schools will overcome their fears of the costs of ANSI compliance. This will make them less vulnerable to the false panacea of classroom amplification. But in the short run, advocates of good classroom acoustics must spread the word. We need to get our message to school decision makers as compellingly as amplifier vendors and lobbyists: Classroom amplification is not a substitute for good acoustics. **AT**

David Lubman is an acoustical consultant/scientist in Orange County, California specializing in architectural acoustics and noise. He was co-chair (with Louis C. Sutherland) of the ANSI working group that developed the influential classroom acoustic standard, ANSI S12.60-2002.

Lubman's research helped standardize sound power measurements that is now widely used for rating HVAC equipment noise. He was senior editor of the book *Acoustics of Worship Spaces*, published by the American Institute of Physics in 1985. He is a founder of a new acoustical field, archaeological acoustics. A Fellow of the Acoustical Society of America, Lubman served in many elected and appointed positions in the acoustics community. He was an ASA Executive Councilman and chaired its technical committee on Architectural Acoustics. In May 2004, Lubman was awarded the Society's Helmholtz-Rayleigh Interdisciplinary Silver Medal in Acoustics. He now chairs the National Council of Acoustical Consultant's Honors and Awards Committee.

6,745,149

43.50.Gf ACOUSTICAL NOISE REDUCING ENCLOSURE FOR ELECTRICAL AND ELECTRONIC DEVICES

Todd W. Beeten, Nashville, Tennessee
1 June 2004 (Class 702/132); filed 3 July 2001

Although there appear to be many commercially available examples of

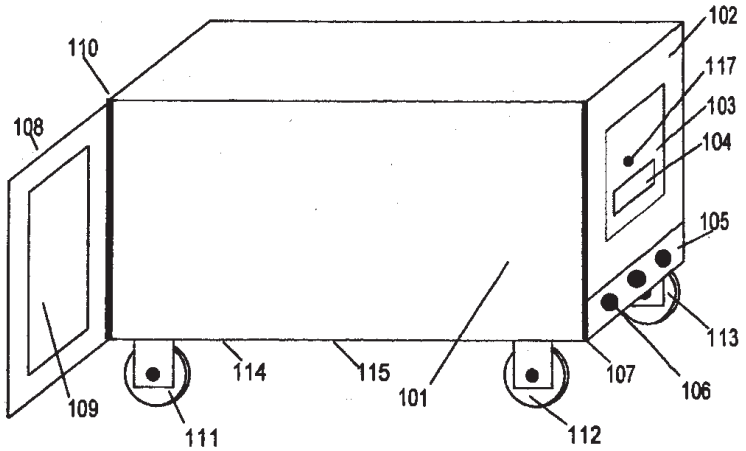

this type of device available (enter the appropriate keywords in your favorite search engine), a patent was issued nonetheless.—NAS